MET007 - Install Instructions M HANDLE - No Logo 20200603.pdf 8 3/06/2020 10:03:55 am

Suitable for the following Cabinet Widths. For Imperial sized cabinets with 5/8" sides please refer to the related Metric positioning:

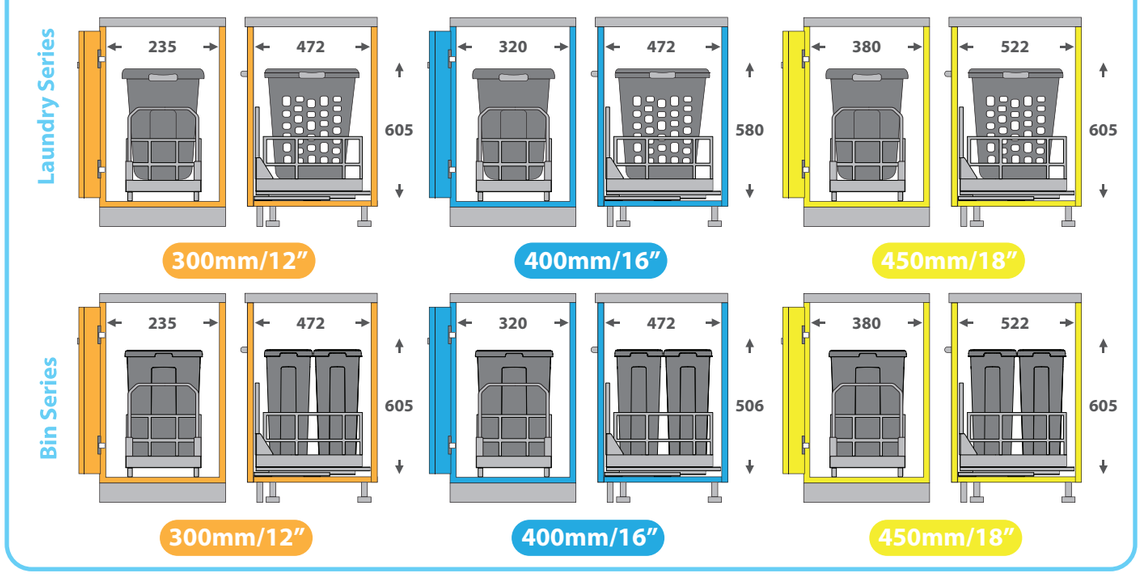

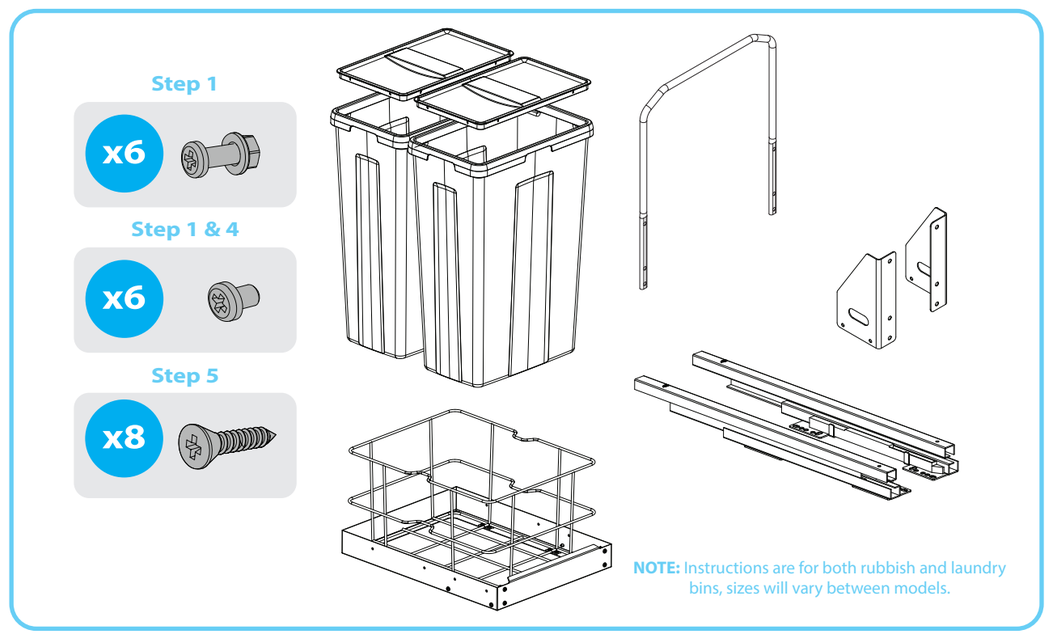

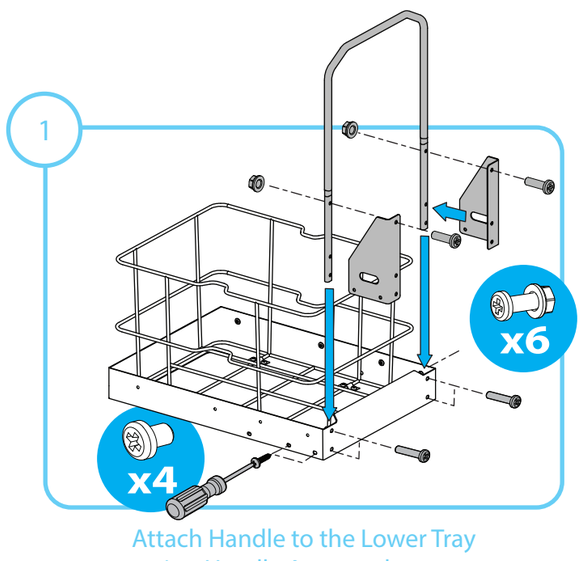

Attach Handle to the Lower Tray using Handle Arms and screws

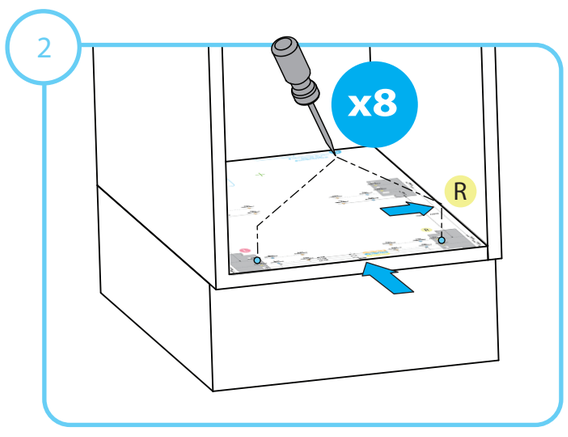

Place template in cabinet so the right side of the sheet is hard up against the wall. Use template to mark bracket holes with awl in bottom of cabinet.

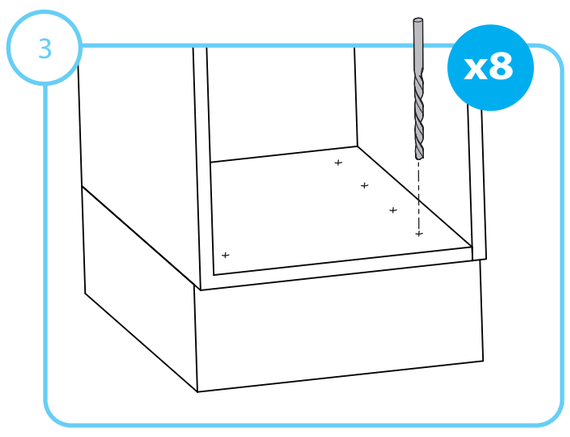

Drill bracket holes in bottom of cabinet.

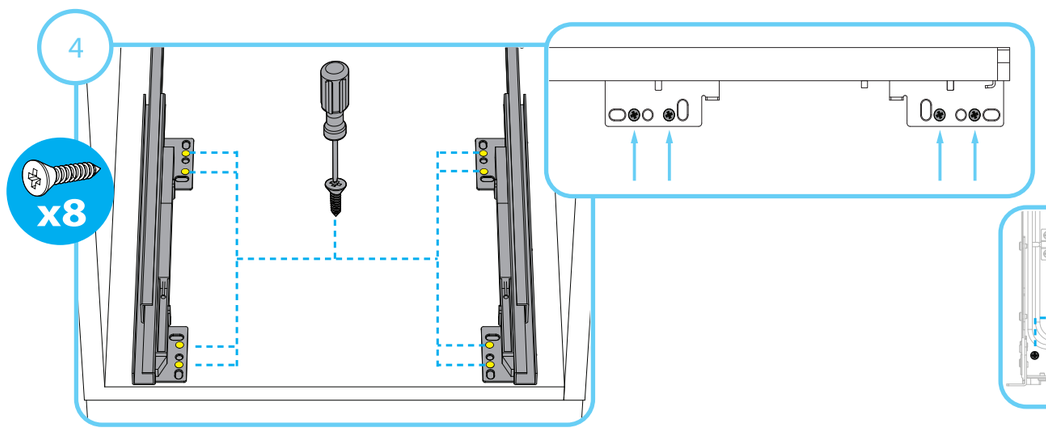

Screw brackets to bottom of cabinet.

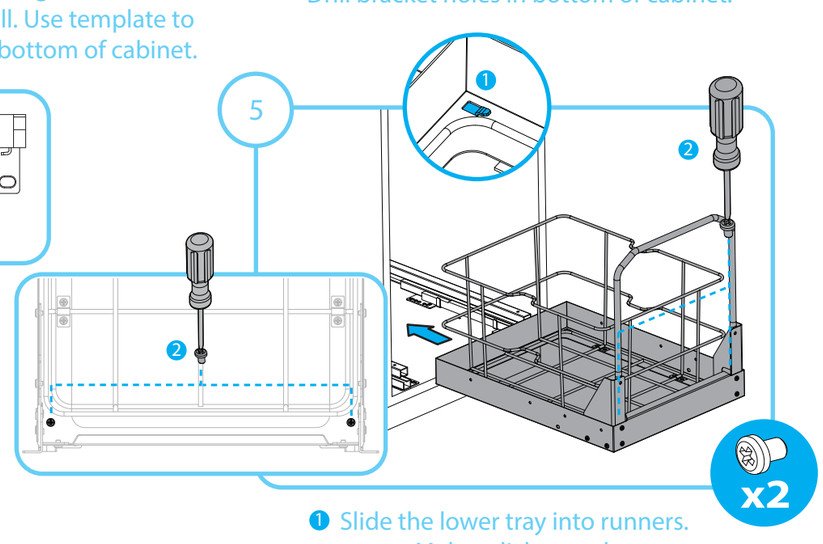

❶ Slide the lower tray into runners. Makes click sound.
❷ Screw lower tray to runner.

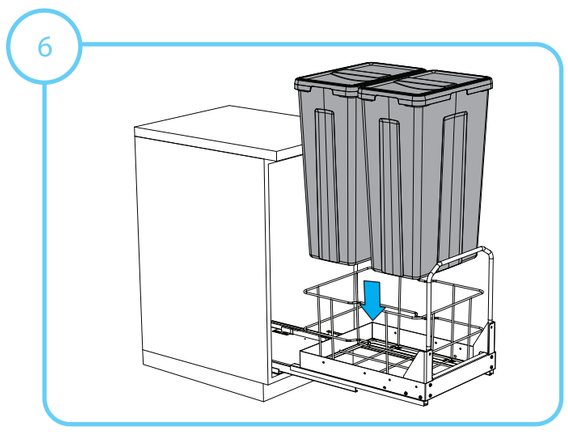
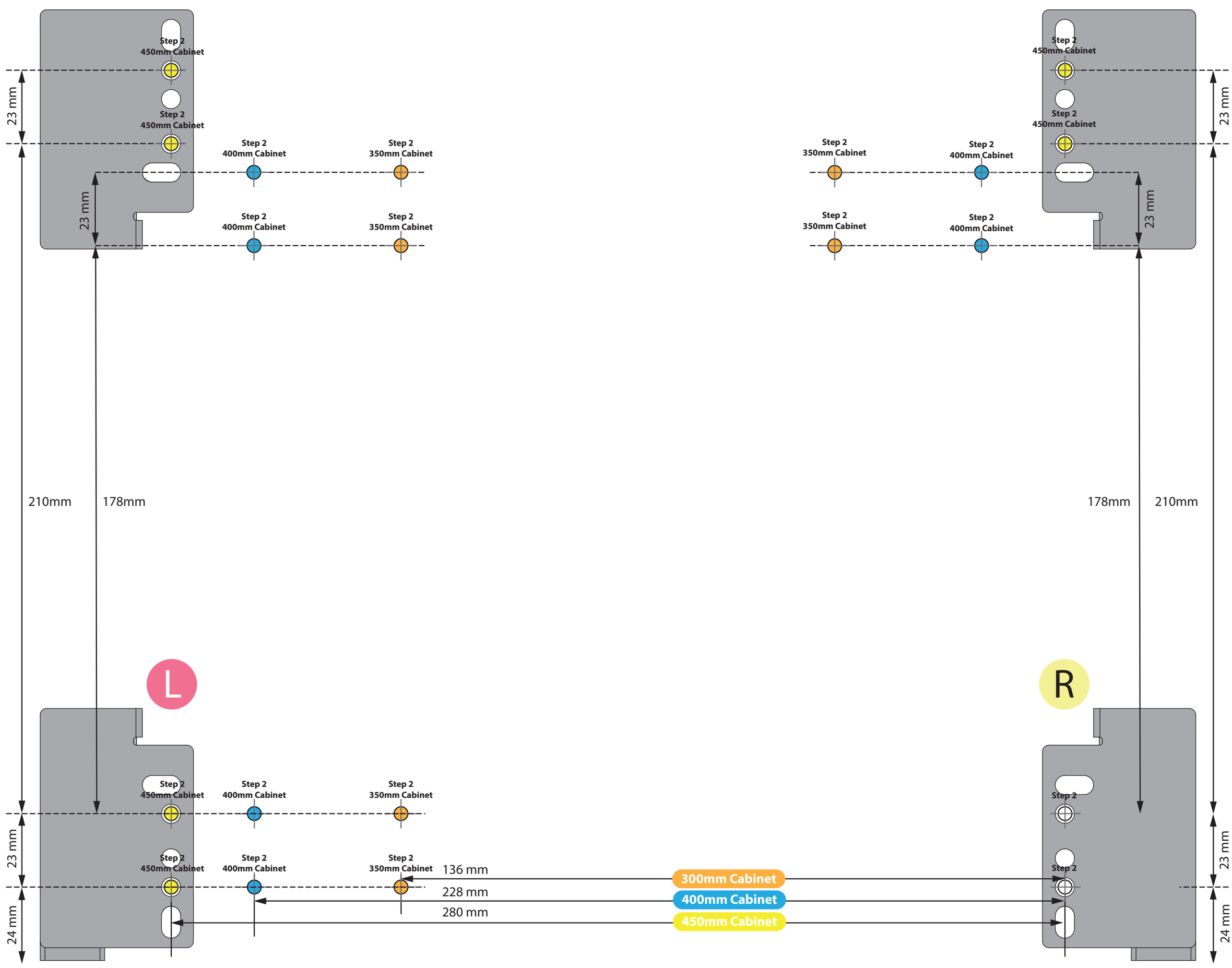
Install bin/s